PRO LITE

FROM SENTRY

sentry door-blanks
2010

- comprehensive approvals for 30 minute fire resistance applications including glazing
- plywood faces / 3.6 mm exterior grade
- tri-layer / lightweight laminated timber core
- optional mdf (6 mm) / particle-board (6 mm) faces

PRO LITE

FROM SENTRY

Construction Specification:

The core of sentry PRO LITE comprises a tri-layer low density hardwood construction. The core is faced with 3.6mm exterior grade hardwood plywood. (Phenolic Glue line)

Size Adjustment:

Leaves may be reduced in height and width without restriction but the top rail must remain unaltered – vertical edges must be lipped in accordance with the instructions below (please refer to door edge lippings section). Single leaves up to 2260mm in height and up to 968mm in width may have the top rail removed but all edges must be lipped.

Glazing:

Up to 0.91 m2 of glazing per leaf is approved in sentry PRO LITE (all configurations). Apertures must not be less than 100mm from any door edge. Multiple apertures are acceptable up to the maximum approved total area, with a minimum dimension of 80mm between apertures. The aperture shape is not restricted, providing the intumescent material and beads are proven to be compatible with that shape.

Approved glasses are:

6/7mm Pyroshield, 7mm Pyrobelite, 7.2mm Pyroguard, 7.5 Pyrodur Plus, 10mm Pyrodur, 12mm Pyrobel, 15mm Pyrostop. Alternative glass products may be used, providing relevant evidence generated in suitable timber door construction can be provided.

Approved proprietary glazing systems are:

Lorient System 36, Sealmaster Fireglaze 30, ISL Therm-A-Glaze 30, Mann McGowan Pyroglaze 30, Reddiplex R8193 glazing channel, Lorient Flexible Figure 1. Installation must be in accordance with the glass / glazing system manufacturer's recommendations.

Door frames:

Softwood or hardwood is approved in minimum density 510 kg/m3 in a minimum section of 70 x 32 mm after rebating / profiling. Single acting door frames must incorporate a 12 mm rebated or planted stop. Double acting frames must be scalloped or fitted with shoulders to maintain specified gap dimensions. Frame joints must be morticed and tenoned, nailed or screwed and with no gaps. MDF doorframes are also approved. Please refer to the global assessment for details.

THE FOLLOWING DIAGRAMS DEPICT ACCEPTABLE FRAME INSTALLATIONS

U Value:

The thermal performance of sentry PRO LITE evaluate with softwood door frame section 70 x 32, in flush door format, in accordance with B.S.EN ISO 10077-2: 2003, performed in an Approved Document L compliant configuration is:- 2.0W/m2K Report Reference Chiltern Dynamics Chilt/T04005 refers.

Intumescent materials:

ISL Therm-a-seal intumescent is approved in sections to correspond to required leaf sizes and configurations as shown in the table below. Note that intumescent seals may be fitted to the door edges or frames.

Door edge lippings:

6mm - 18mm square or 8 - 20mm rounded (maximum 2mm profiling) hardwood (minimum density 640 kg/m3) are required to vertical edges only. In areas of high humidity, all edges should be lipped. Glue lines should be UF, Cascamite or P.U. adhesives.

Door gaps:

Door edge gaps should be controlled to replicate those used in testing. As a general guideline, gaps should not exceed 4mm. The door edge gap at the threshold can be increased to10mm to allow for floor coverings.

Fixing / Sealing to Structural openings:

The supporting construction must be capable of staying in place and intact for the full period of fire resistance required from the doorset. Fixing and sealing the frame against the structural opening is an important factor in the fire resistance performance of fire resisting doorsets. The frame jambs should be fixed to the supporting construction using steel fixings at 500mm maximum centres, preferably adjacent to all hinge positions. Fixings must be of the appropriate type and must penetrate to a minimum depth of 50mm. Whilst the frame head does not require fixing, packers must be inserted. Guidance for various methods of sealing the frame to structural openings is provided in BS8214:1990 "Code of Practice for Fire Door Assemblies with Non-Metallic Leaves" which should be referred to where appropriate.

PRO LITE FROM SENTRY	Latched Single Acting Doorsets	Unlatched & Double Acting Single Doorsets	Latched Single Acting Double Doorsets	Unlatched & Double Acting Double Doorsets
Leaf Sizes From: To:	2415 x 1513mm 3020 x 1210mm	2415 x 1488mm 2970 x 1210mm	2110 x 976mm 2406 x 915mm	2110 x 951mm 2356 x 915mm
Maximum Glazed Area:	Up to 0.91m² per leaf for all configurations			
Frame Specification:	70 x 32mm Softwood/Hardwood – min density 510kg/m²			
Approved Intumescent Materials Head/Jambs:	1 No. 15 x 4mm fitted centrally increase to 20 x 4mm for leaves over 2400mm high x 1200mm wide or if MDF frame used 25 x 4mm for leaves over 2800mm high	1 No. 15 x 4mm fitted centrally	1 No. 15 x 4mm fitted centrally increase to 20 x 4mm if MDF frame used **Meeting Edges:** 1 No. 15 x 4mm fitted centrally in one leaf only	
Supporting Technical Data:	Test reports RF04016, RF00158, RF015096 (AR2) covering sentry PRO LITE Doors fire resistance tested to BS476 Post 22:1987 in various configurations and leaf sizes at the laboratories of Chiltern International Fire Ltd provide the basis for Assessment CHILT/A04030 REV.A. conducted to BS476:Part 22:1987			

Overpanels:

Overpanels are permitted in all approved configurations providing they incorporate a transom of a minimum specification to that stated for door frames. Maximum overpanel heights are as follows: Single leaf doorserts: 2000mm Double leaf doorsets: 1500mm Overpanels must be fixed by back screwing through the frame with steel screws passing at least 30mm into the centre line of the vertical and top edges of the overpanel, no more than 100mm from each corner and a maximum of 250mm centres in-between. Intumescent seals of the same dimension and specification must be used in all edges of the overpanel to frame junction.

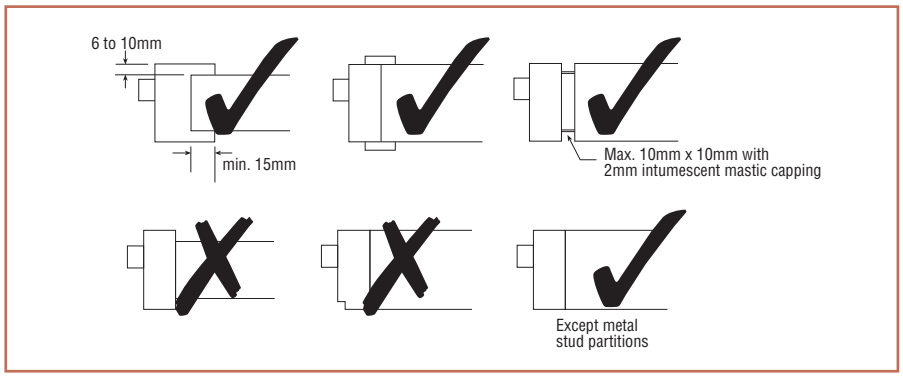

Sentry product information is available on the worldwide web at

www.sentry-doors.com

from

SENTRY INTERNATIONAL

Sentry International
Cockfield
Suffolk
IP30 0HP UK

T: 01284 828 881
F: 01284 827 070
E: info@sentry-doors.com